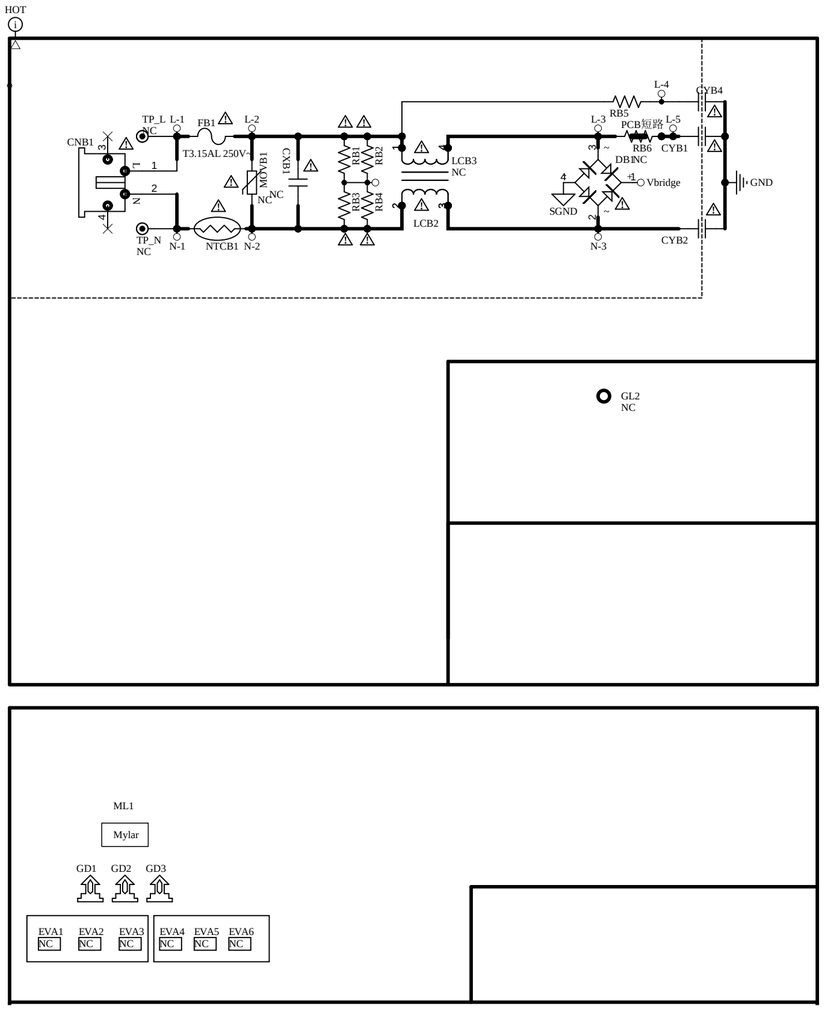

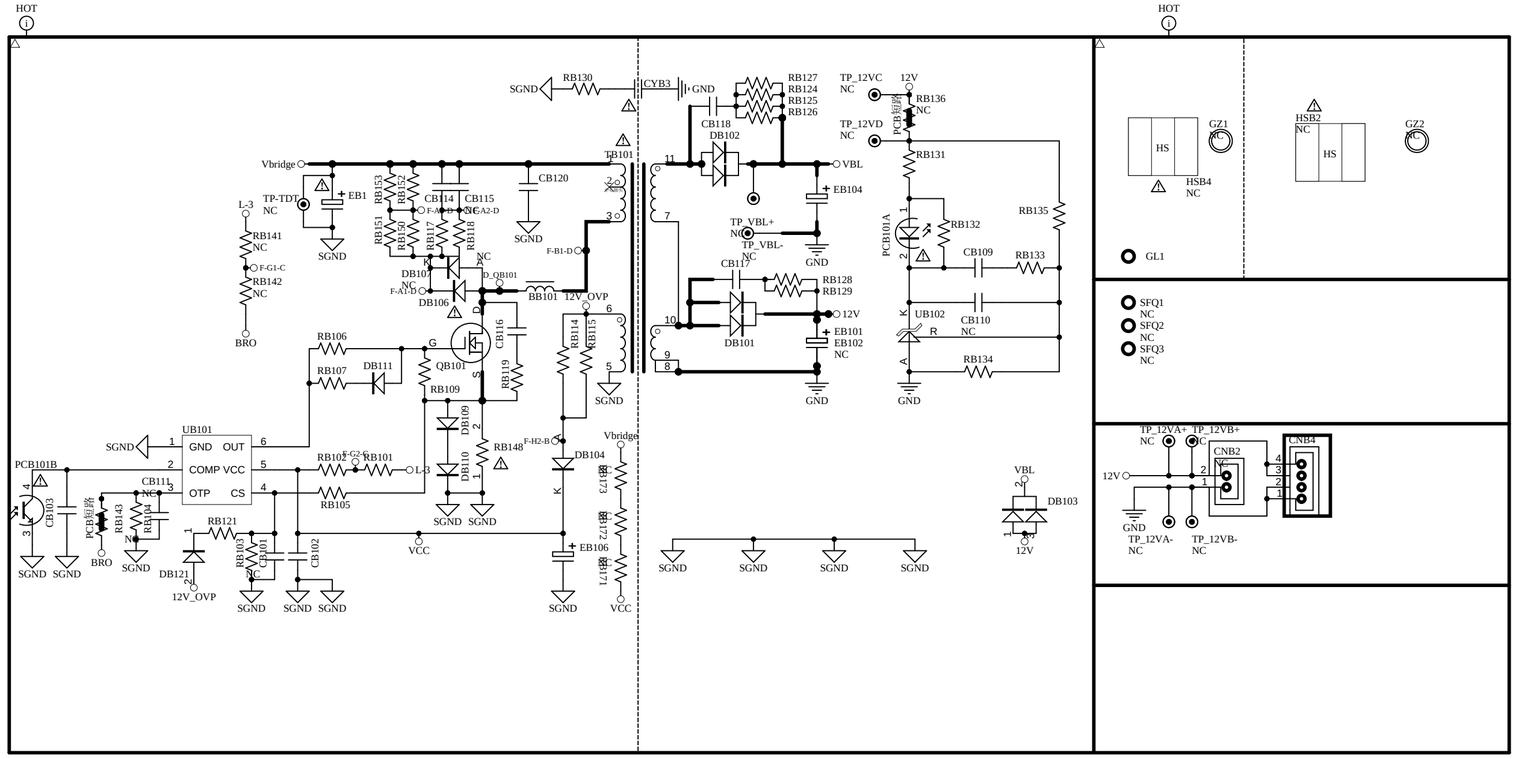

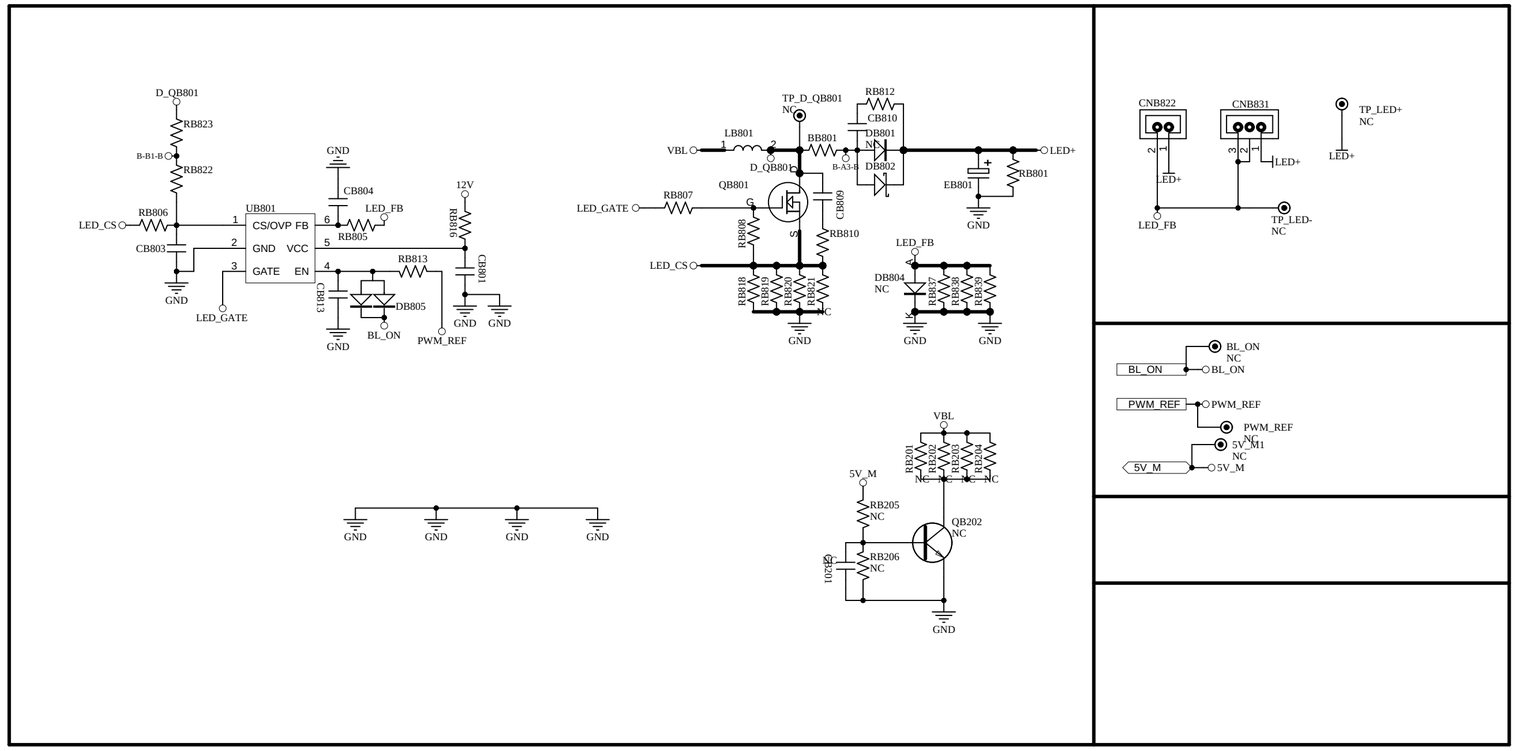

CVTE
Dream·Future